CREATIVE ILLUMINATION INC

ASL Series

OUTDOOR ADJUSTABLE SIGN LIGHT

Features

- Aluminum housing with transparent acrylic lens
- Gasketed junction box
- 360 degree rotation for aiming purposes
- Wet location approved
- UL Listed

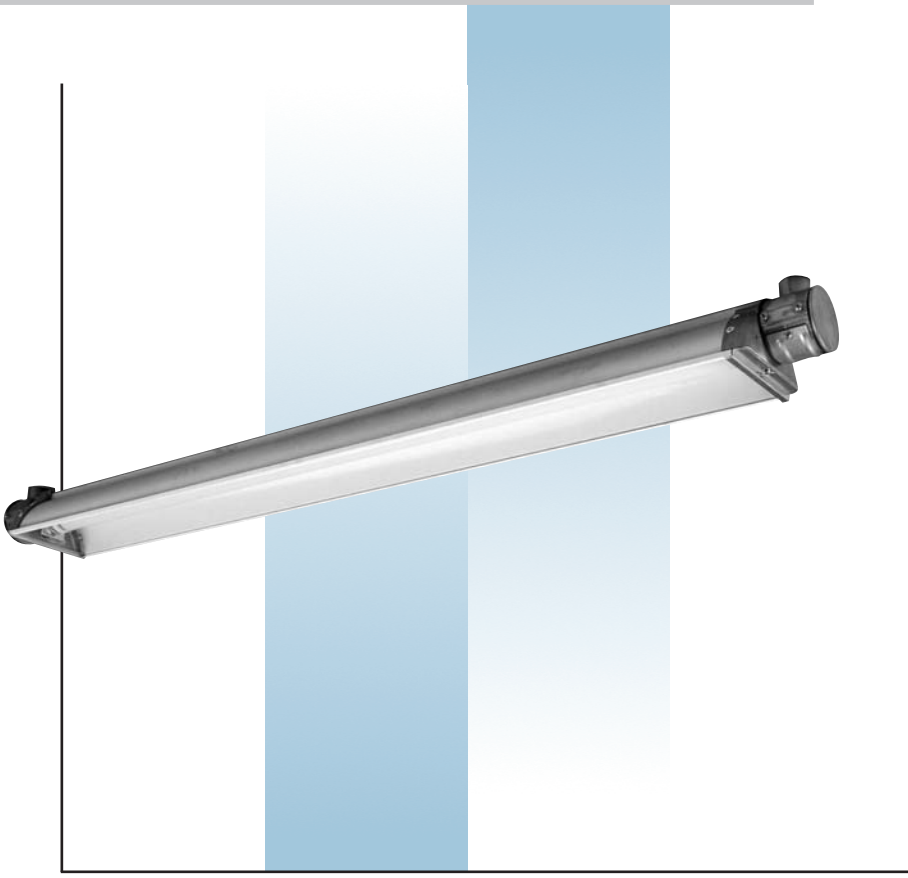

Specifications

- Ballasts are thermally protected Class P, non-PCB and UL listed. Electronic ballasts are sound rated "A".
- Housing is extruded high quality aluminum in a parabolic shape for maximum light output and efficiency. Heavy gauge die cast aluminum ends screw to housing to seal fixture from the weather.
- The junction box, with neoprene gasket, contains all of the wiring splices and allows fixture to rotate a full 360 degrees.
- Ballast comes in rain tight gutter.
- Standard diffuser is 100% virgin acrylic that slides into grooves to protect the lamps.

Application

- Commercial
- Building exteriors
- Billboards
- Sign illumination
- Security lighting

Options

- 120 volt
- 277 volt
- T8 electronic configuration
- Very high output (VHO)
- T12 Configurations (Subject to Federal Law)

Catalog Number	Type

CREATIVE ILLUMINATION INC

1298 S. Kalamath Street, Denver, Colorado 80223 • Phone: 303-744-3488 Fax: 303-778-0360